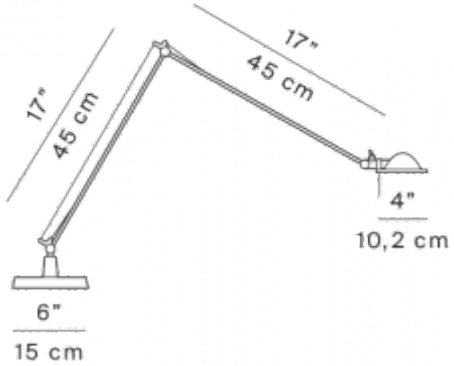
17"
45 cm
17"
45 cm
4"
10,2 cm
6"
15 cm